YT-6007-A1 Lens Specification

1. SPECIFICATION:

1.SENSOR SIZE		PC1089
2.WAVELENGTH	λ=	400-700nm
3.FOCAL LENGTH (EFL)	f=	1.3mm
4.F/NO (INFINITE)	F/NO=	2.0
5.BACK FOCAL LENGTH	BFL=	2.71
6.FLANGE BACK LENGTH	FB=	1.57
7.FIELD OF VIEW(D)	=	200°
FIELD OF VIEW(H)	=	172°
FIELD OF VIEW(V)	=	130°
8.TV DISTORTION	<	-35%
9.THREAD SIZE	=	M12XP0.5
10.STRUCTURE	=	4G2P

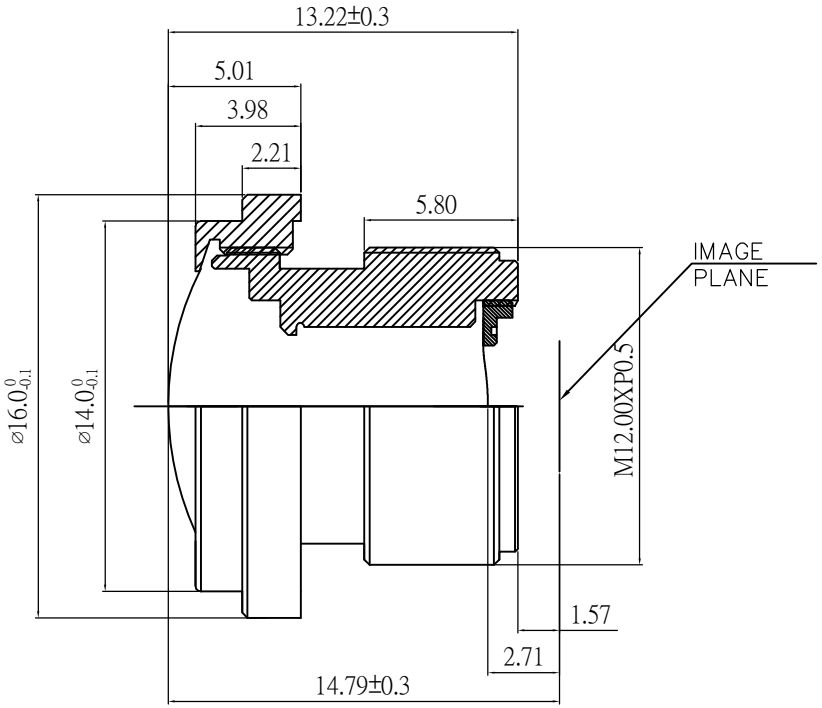

REV	DESCRIPTION	DATE	NAME
①			
②			
③			
④			

NAME	YT-6007-A1	SCALE	4:1	DRAWN	黄光深
VIEW	REV 00	DATE	2024.03.18	CHECKED	
Wintop Optics		BORDER	A4	APPROVED	