# YT-6048P-A1 Lens Specification

| 云泰型号: | 客户型号: |
|---|---|
| YT-6048P-A1 | |

| | |
|---|---|
| MAX Img-Circle（mm） | ø4.2 |
| EFL（mm） | 1.32 |
| F/NO. | 1.6 |
| Optical TTL | 13.41 |
| Mechanical TTL | 13.41 |
| BACK FOCAL LENGTH | 2.35 |
| FLANGE BACK LENGTH | 1.30 |
| TV DISTORTION | <-45% |
| RELATIVE ILLUMINATION | ≥60% |
| CRA | 14° |
| Pixel Size（μm） | 2.0um*2.0um |
| Storage At Temperature | -40℃~+85℃ |
| Recent Camera Distance | 0.2 |
| Infrared | No |
| WAVELENGTH | @420~610nm Tavg≥90% T=50% @650±10nm |
| Waterproof Level | IP67 |
| STRUCTURE | 3G3P+1IR |

| IMX335 | 2592*1944 |
|---|---|
| D/ø6.48 | >200° |
| H/ø5.18 | >200° |
| V/ø3.89 | 176° |

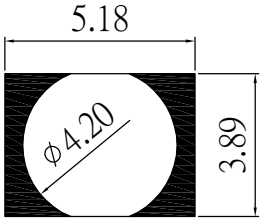


感光示意图

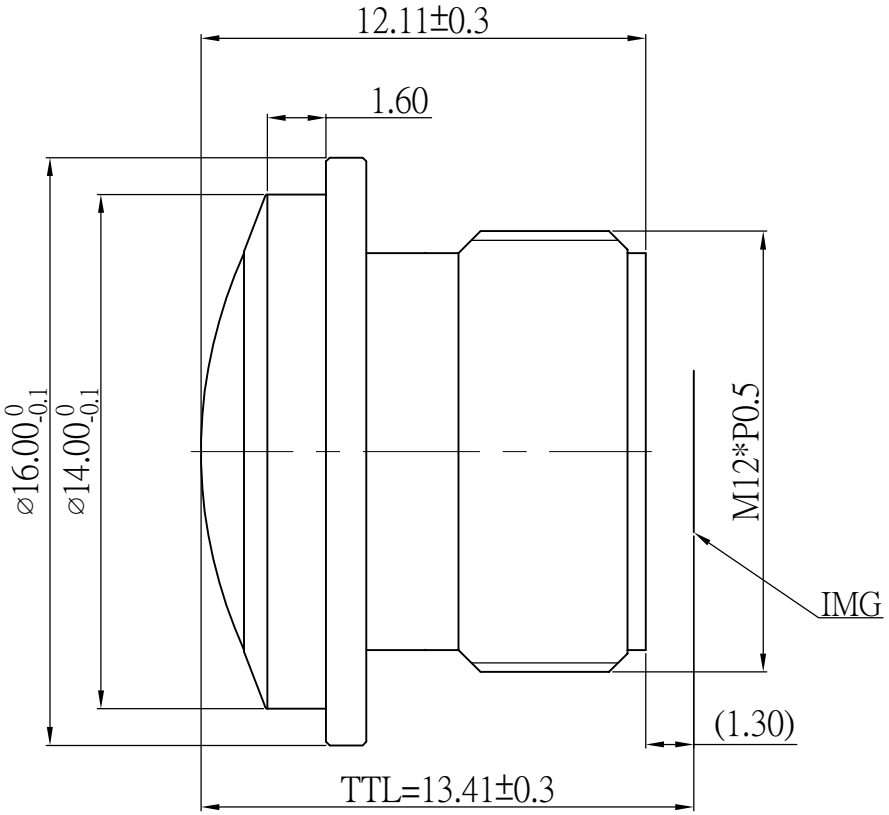


| REV. | 00 |
|---|---|
| REVISON HISTORY | |
| 2024/03/18 | NEW |
| | |
| | |

| REV | DESCRIPTION | DATE | NAME |
|---|---|---|---|
| ① | | | |
| ② | | | |
| ③ | | | |
| ④ | | | |

| NAME | YT-6048P-A1 SPEC | | | SCALE | | DRAWN | 黄光深 |
|---|---|---|---|---|---|---|---|
| VIEW | | REV | 00 | DATE | 2024.03.18 | CHECKED | |
| Wintop Optics | | | | BORDER | | APPROVED | |