YT-1683-C1 Lens Specification

1.SENSOR SIZE		JX-F23（1932*1088）
2.WAVELENGTH	λ=	400－700
3.FOCAL LENGTH (EFL)	f=	3.2mm
4.F/NO (INFINITE)	F/NO=	2.2
5.BACK FOCAL LENGTH	BFL=	5.61
6.FLANGE BACK LENGTH	FBL=	4.74
7.FIELD OF VIEW(D)	=	129°
FIELD OF VIEW(H)	=	106°
FIELD OF VIEW(V)	=	56°
8.TV DISTORTION	=	-18%
10.CHIEF RAY ANGLE	=	13°
11.RELATIVE ILLUMINATION	>	53%
12.THREAD SIZE		M12×P0.5
13.STRUCTURE		4G

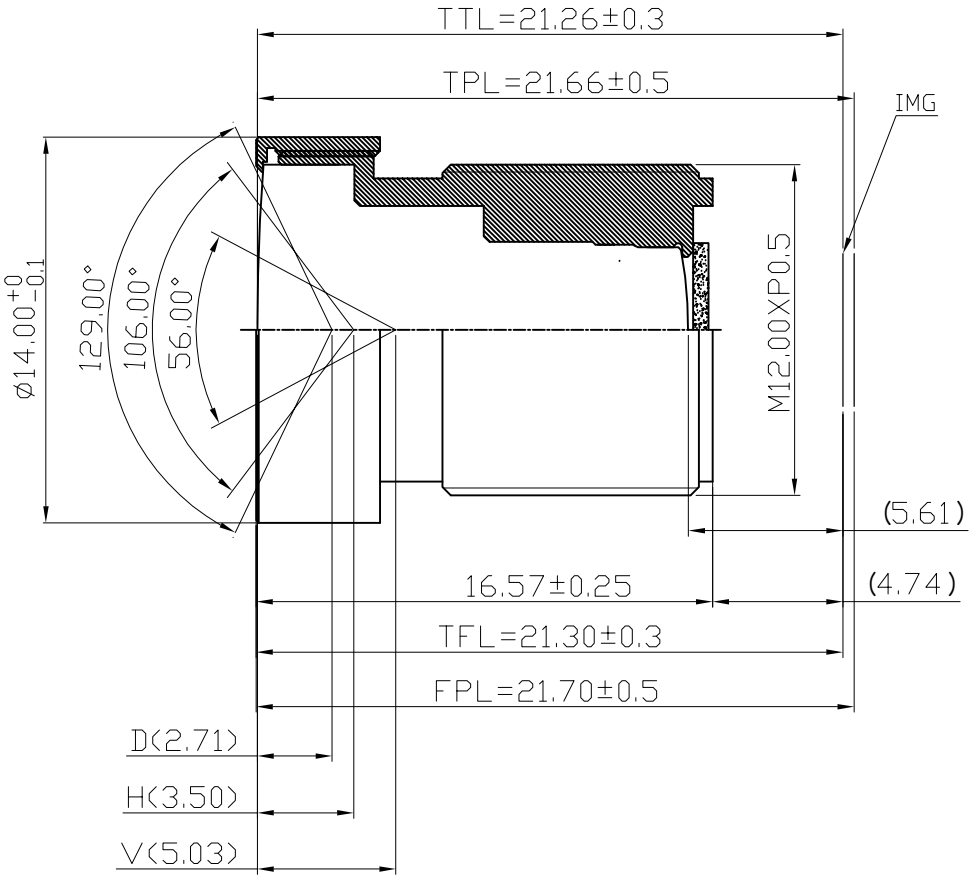

REV	DESCRIPTION	DATE	NAME
①			
②			
③			
④			

NAME	YT-1683-C1-SPEC		SCALE		DRAWN	黄光深
VIEW		REV 00	DATE	2024.3.18	CHECKED	
Wintop Optics			BORDER		APPROVED	