YT-1712-F2 Lens Specification

云泰型号:	客户型号:
YT-1712-F2	

Img-Circle（mm）	⌀7.0
EFL（mm）	1.95mm
F/NO.	2.4
Optical TTL	17.3
Mechanical TTL	17.3
BACK FOCAL LENGTH	3.49
FLANGE BACK LENGTH	3.0
TV DISTORTION	-10%
Relative Illumination	≥75%
CRA	9°
Pixel Size (μm)	3.75um*3.75um
Storage At Temperature	-40℃~+85℃
Recent Camera Distance	0.2
Infrared	非红外
WAVELENGTH	@420~620nm Tavg≥90%
Dust Level	IP5X
STRUCTURE	4G2P+IR

JX-H65(1280*960)		FOV
⌀3.60 * ⌀4.80 * ⌀6.00	垂直	92°
	水平	114°
	对角	131°

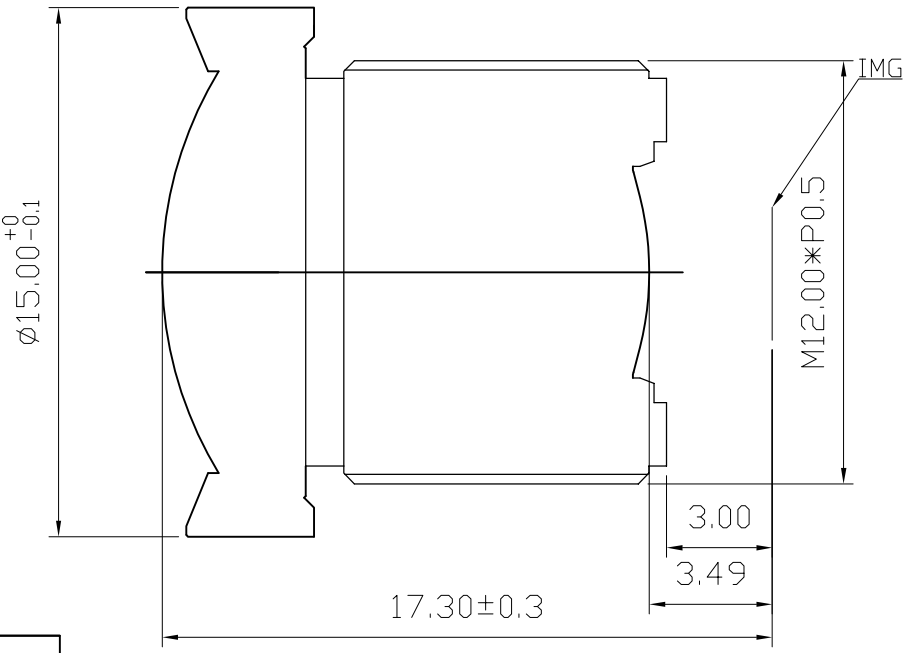

REV.	00
REVISON HISTORY	
2024/03/18	NEW

REV	DESCRIPTION	DATE	NAME
①			
②			
③			
④			

NAME	YT-1712-F2 SPEC		SCALE		DRAWN 黄光深
VIEW	REV 00		DATE	2024.03.18	CHECKED
Wintop Optics			BORDER		APPROVED